AM RADIO BROADCASTING

Faculty of Engineering | Helwan Universty

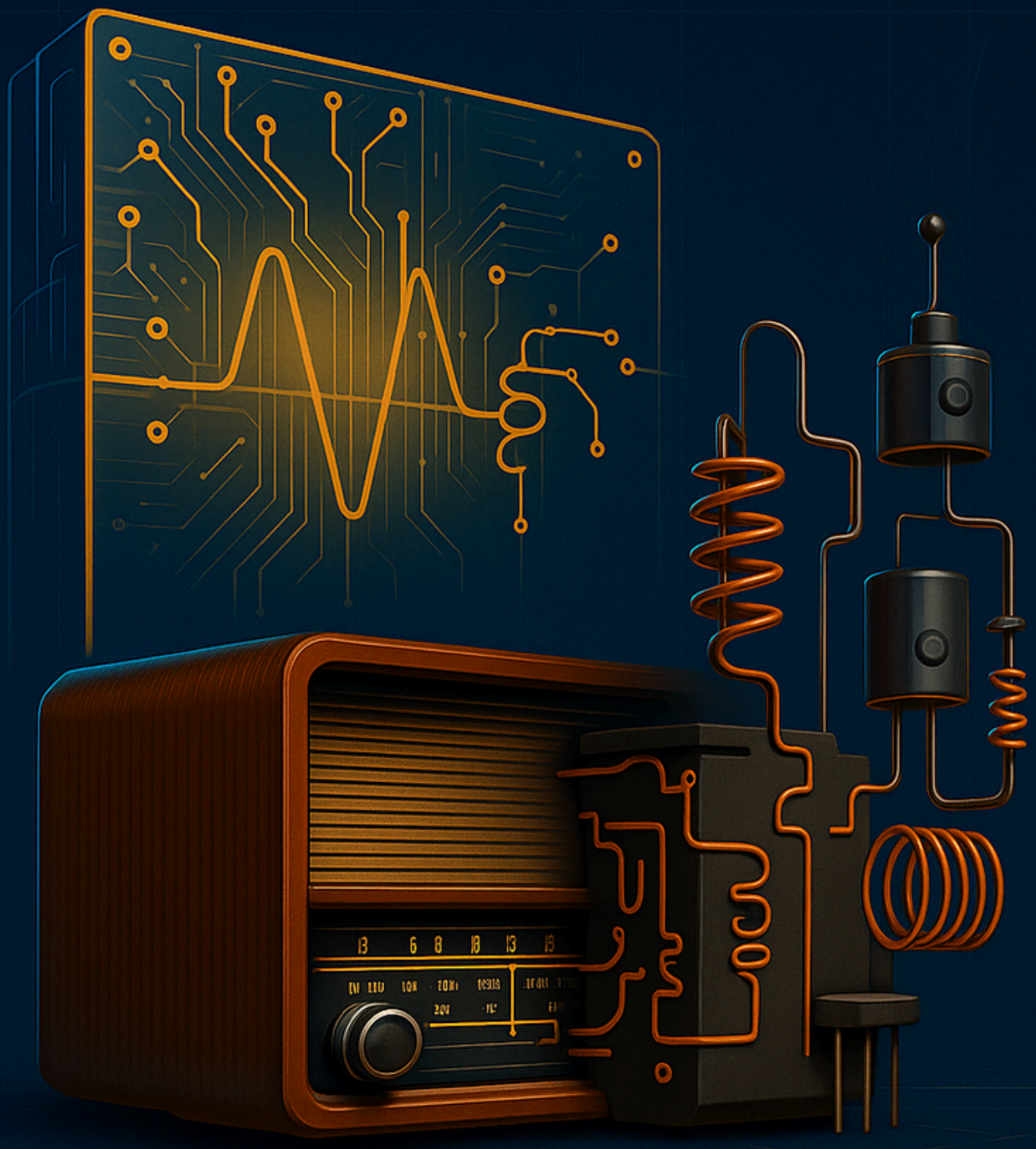

Supervised by : Prof. Ahmed Salah

GROUP NAME LIST

1	ضياء صلاح الدين عبدالمنعم	SECTION 3
2	علي حمدي علي عشماوي	SECTION 4
3	عبدالرحمن محمد احمد يوسف	SECTION 3
4	محمد محمود عاطف صالح	SECTION 5
5	محمد محمود محمد الاعصر	SECTION 5
6	عمرو وحيد محمد عبدالله	SECTION 4
7	أحمد رائد أحمد النجار	SECTION 1
8	محمد ابراهيم محمد ابراهيم	SECTION 5

Amplitude Modulation (AM) with Double Sideband with Carrier (DSBWC) is one of the oldest and most fundamental modulation techniques in radio communications. In this technique, the amplitude of a high-frequency carrier signal (100 kHz in this project) is varied in proportion to the instantaneous amplitude of the modulating signal (audio signal).

$$s_{\text{DSB-WC}}(t) = A_c \cos(2\pi f_c t)\,[1 + k_a m(t)]$$

Importance of AM Modulation:

- Simple implementation compared to other modulation techniques
- Compatible with simple receiver designs (crystal radios can demodulate AM signals)
- Efficient for medium and long-wave broadcasting
- Requires relatively narrow bandwidth (twice the highest modulating frequency)

Advantages compared to FM:

- Simpler circuit implementation
- Smaller bandwidth requirements
- More suitable for long-distance propagation via skywaves
- Lower power consumption for the same coverage area

Disadvantages compared to FM:

- More susceptible to noise and interference
- Lower audio quality due to bandwidth limitations
- Less efficient in terms of power utilization
- More affected by atmospheric disturbances

2) Objectives:

The main goals of this AM radio broadcasting project were to design, simulate, and build a functional **transmitter** and **receiver** system using discrete components and operational amplifiers. The key objectives included:

1. **Design a Stable 100 kHz Carrier Signal Generator**
    - Implement a **Colpitts oscillator** to produce a stable 100 kHz sinusoidal carrier wave.
    - Ensure minimal frequency drift and harmonic distortion.

2. **Develop an AM Transmitter**

- Amplify the input audio signal using **LM386 op-amps**.
- Modulate the carrier wave with the audio signal using a **single-diode modulator**.
- Filter the modulated signal with a **bandpass filter (LM741-based)** to remove unwanted harmonics.
- Amplify the output for transmission via an antenna.

3. **Build an AM Receiver**
   - Use a **tuned RF amplifier (LM741)** to select the desired AM signal.
   - Demodulate the signal using an **envelope detector (diode + RC circuit)**.
   - Filter out high-frequency components with a **low-pass filter (LM741)**.
   - Amplify the recovered audio signal using an **LM386 audio amplifier** for speaker output.
4. **Simulate and Validate the Design**
   - Simulate the circuit in **Proteus** to verify performance.
   - Implement the design on a **breadboard** for testing.
   - Transition to a **PCB** for a stable, noise-resistant final product.
5. **Evaluate Performance**
   - Measure signal clarity, frequency stability, and transmission range.
   - Compare simulated results with real-world performance.

This project successfully demonstrated the principles of **AM (DSBWC) modulation**, from signal generation to transmission and reception, while providing hands-on experience in analog circuit design.

3) Overview of Radio Broadcasting

Radio broadcasting is the transmission of audio content through radio waves to a wide audience. AM radio broadcasting was the first method developed for broadcasting audio content and remains important today despite the development of FM and digital broadcasting.

AM broadcasting operates in:

- Longwave band (153-279 kHz)
- Medium wave band (531-1,611 kHz)
- Shortwave bands (various frequencies above 1.7 MHz)

Key characteristics of AM broadcasting:

- Carrier frequencies typically between 535-1,605 kHz
- Channel spacing of 9-10 kHz (depending on region)
- Transmission range affected by time of day (longer at night due to ionospheric reflection)
- Subject to interference from electrical equipment and atmospheric noise

4) Transmitter Design and Implementation

Block Diagram:

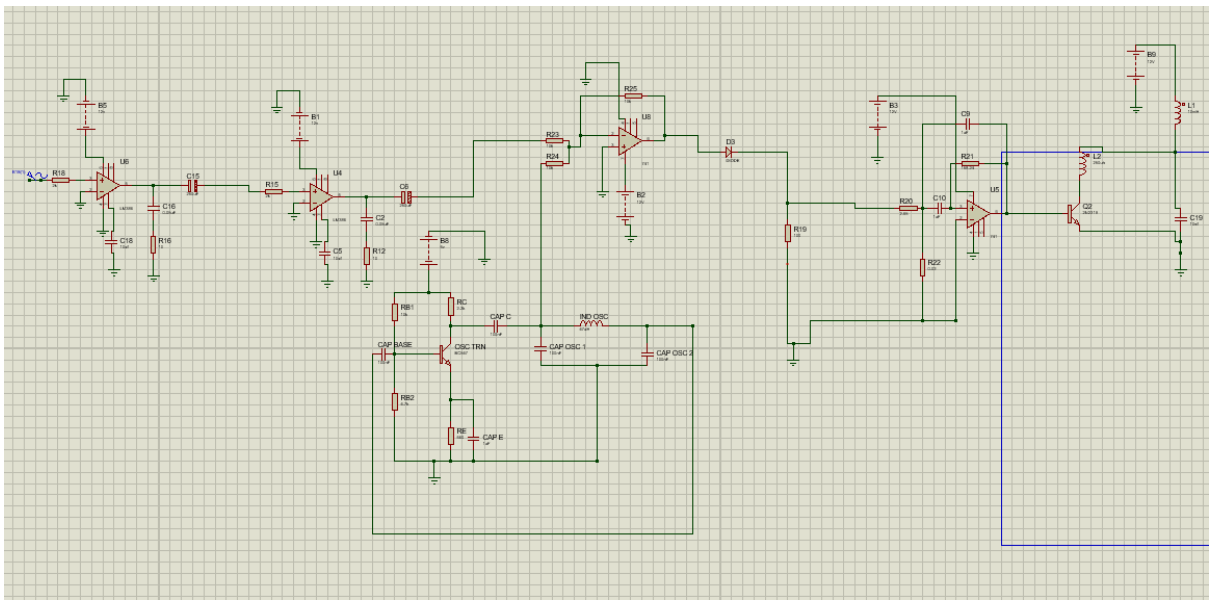

[Audio Input] → [Pre-Amplifier] → [Adder] → [Modulator] → [Bandpass Filter] → [Power Amplifier] → [Antenna]

4.1 Audio Input Stage

Components:

- Microphone/AUX input
- Two LM386 op-amp amplifiers (U1, U2)
- Capacitors:
- Resistors: Various for biasing (values from schematic)

Function:
The audio input stage amplifies the weak signal from the microphone or AUX input to a level suitable for modulation. The LM386 is used because of its:

- Low power consumption

- Built-in gain control (20-200x)
- Ability to operate from a single power supply (5-12V)

Block Diagram:

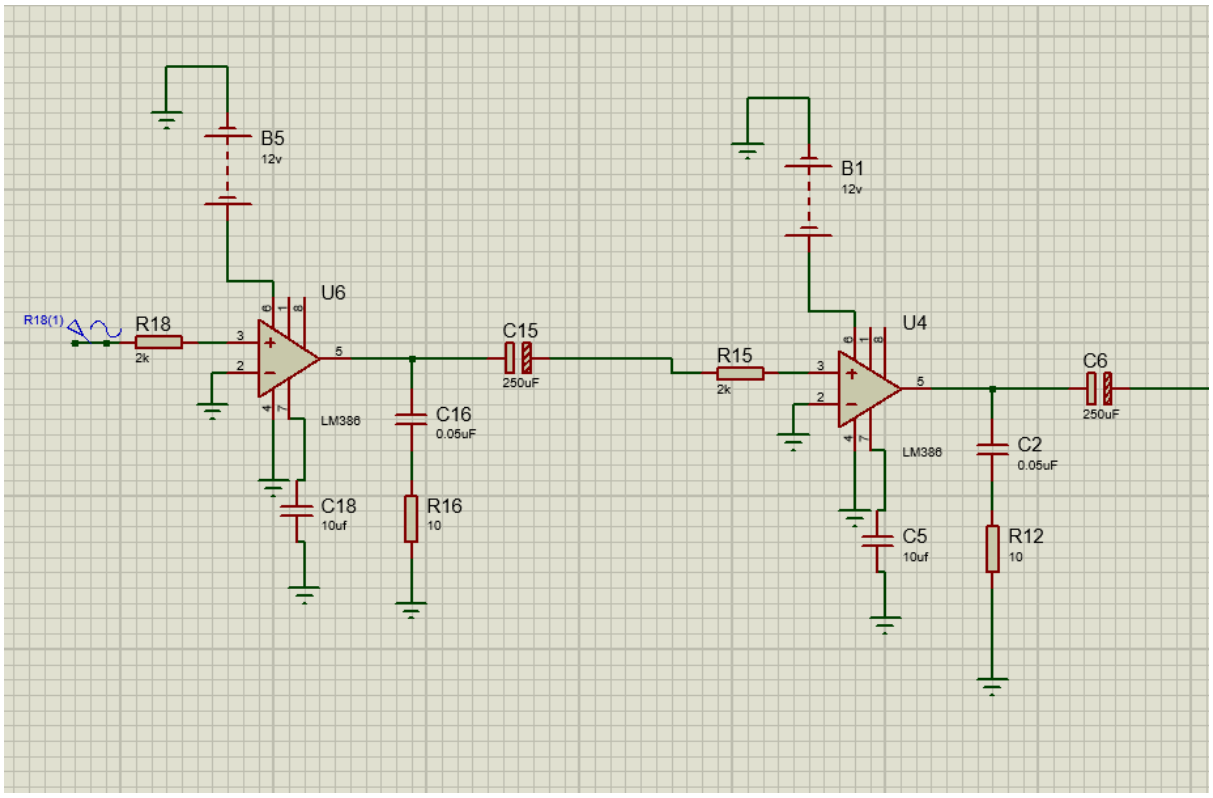

4.2 Carrier Signal Generation (100 kHz Oscillator)

The Colpitts oscillator is a widely used type of LC oscillator that generates sinusoidal waveforms. It is particularly favoured in high-frequency applications such as RF transmitters and communication systems due to its simplicity and frequency stability. The oscillator uses a combination of inductors and capacitors (an LC tank circuit) to determine the frequency of oscillation. In this project, the Colpitts oscillator is employed to generate a carrier signal of 100 kHz

Function:

Generates a stable 100 kHz carrier signal. The oscillator must maintain:

- Precise frequency (100 kHz)
- Stable amplitude

- Low harmonic distortion

4.2.1 Component Description and Inductor Calculation

The Colpitts oscillator circuit designed in this project utilizes the following components:

- **Transistor (Q1)**: BC547 NPN transistor used as the active amplifying device.
- **Capacitors**:
- **Resistors**:
- **Inductor**:

Inductance Calculation

The frequency of a Colpitts oscillator is given by the formula:

$$f = \frac{1}{2\pi\sqrt{L \cdot \left(\frac{C_3 C_4}{C_3 + C_4}\right)}}$$

Assuming $C_1 = C_2 = 100\,\text{nF}$, the equivalent capacitance:

$$C_{eq} = \frac{100\,\text{nF} \cdot 100\,\text{nF}}{100\,\text{nF} + 100\,\text{nF}} = 50\,\text{nF}$$

Solving for inductance L to get 100 kHz:

$$L = \frac{1}{(2\pi f)^2 \cdot C_{eq}} = \frac{1}{(2\pi \cdot 100{,}000)^2 \cdot 50 \times 10^{-9}} \approx 47\,\mu\text{H}$$

Thus, the calculated value of **47 µH** is used for the inductor to ensure the desired carrier frequency.

4.2.2 Circuit Diagram

The Colpitts oscillator is implemented using the BC547 transistor and the LC tank circuit described above. The complete Proteus simulation schematic is shown below:

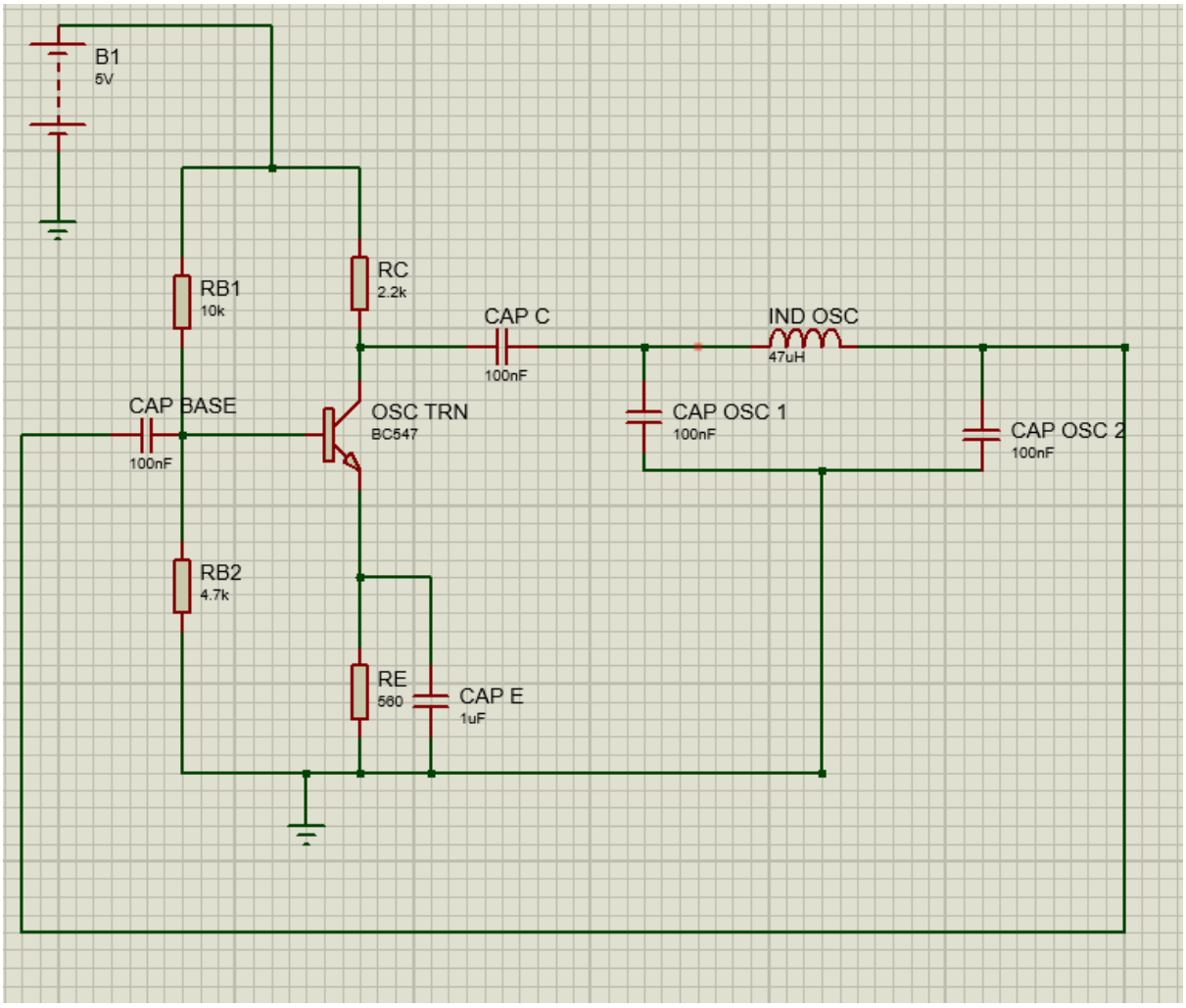

4.2.3 Working Principle

The Colpitts oscillator works based on positive feedback provided by the capacitive voltage divider formed by C3 and C4. Here's the step-by-step operation:

I. **Start-up:** Small thermal noise or an initial fluctuation at the base of Q1 gets amplified.

II. **Feedback Loop:** The capacitive divider (C3 and C4) feeds back a portion of the signal from the collector to the base of the transistor, enabling continuous oscillation.

III. **Tank Circuit:** The LC tank circuit formed by L3 and the series combination of C3 and C4 determines the frequency of oscillation.

IV. **Emitter Grounding:** Capacitor C2 at the emitter serves as a bypass capacitor, providing an AC ground for improved gain and stable feedback.

V. **Output Coupling:** Capacitor C1 couples the AC output signal from the collector to the next stage, such as the modulation circuit.

4.2.4 Simulation and Results

The oscillator was simulated in Proteus. The resulting waveform shows a clean sinusoidal signal at the output with a fundamental frequency centered around 100 kHz, as verified by the Fourier spectrum analyzer.

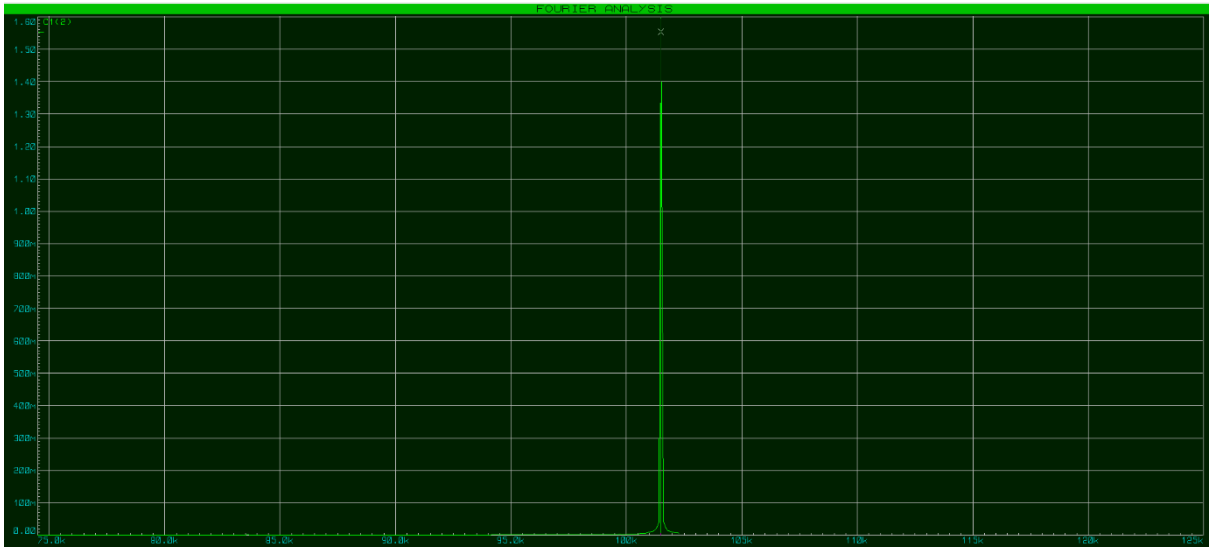

The Fourier analysis clearly indicates a sharp peak at 102 kHz, confirming the successful generation of a close carrier signal to the desired signal due to the nonideality of the components. This carrier will be used in the radio transmitter for modulation

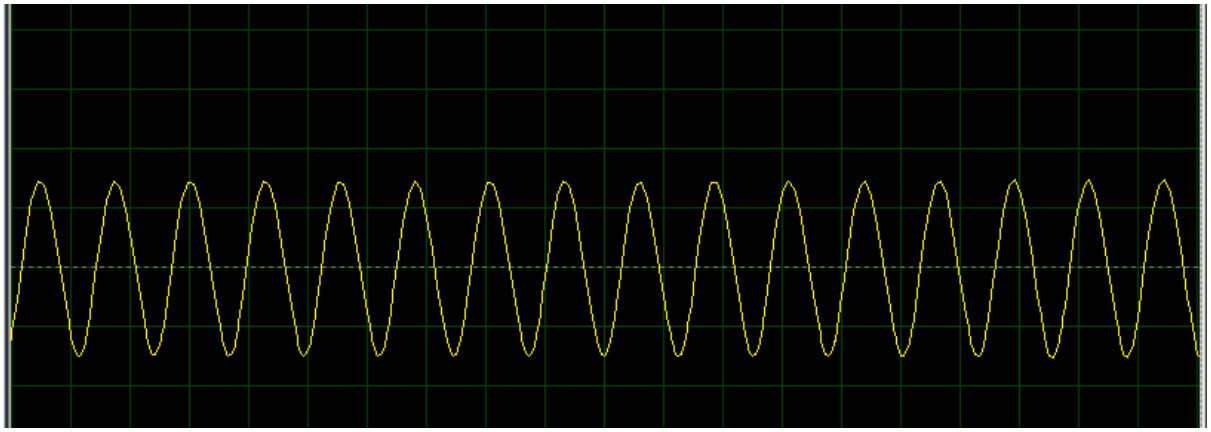

4.3 Modulation Stage

Components:

- Adder circuit using LM741 (U5)
- Modulation diode (D1)

- Resistors:

Function:
The adder combines the audio signal with the carrier wave, and the diode performs the amplitude modulation. The LM741 serves as:

- Summing amplifier for carrier and audio signals
- Provides necessary gain before modulation

Circuit Diagram:

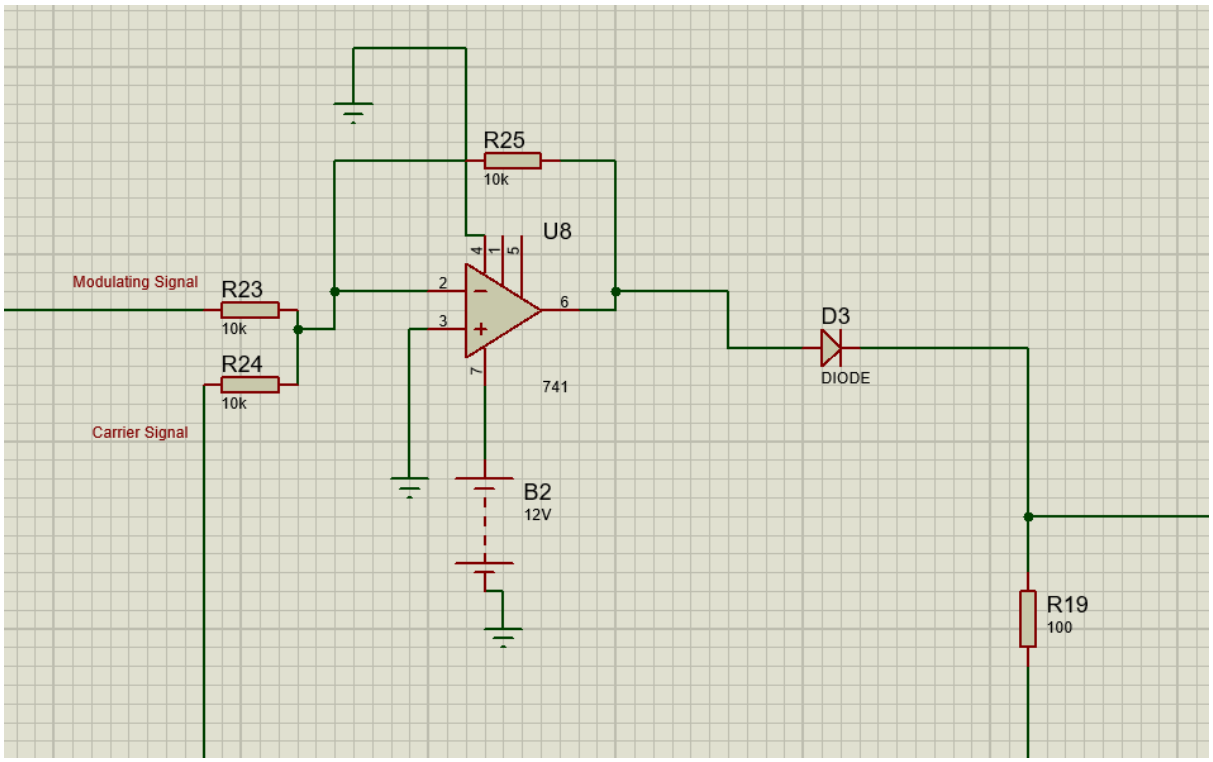

4.4 Bandpass Filter

Components:

- LM741 op-amp (U5)
- Capacitors and resistors forming filter network (values from schematic)

Function:
Filters out unwanted frequencies, passing only:

- The carrier frequency (100 kHz)
- Upper and lower sidebands
- Rejects harmonics and out-of-band noise

Circuit Diagram:

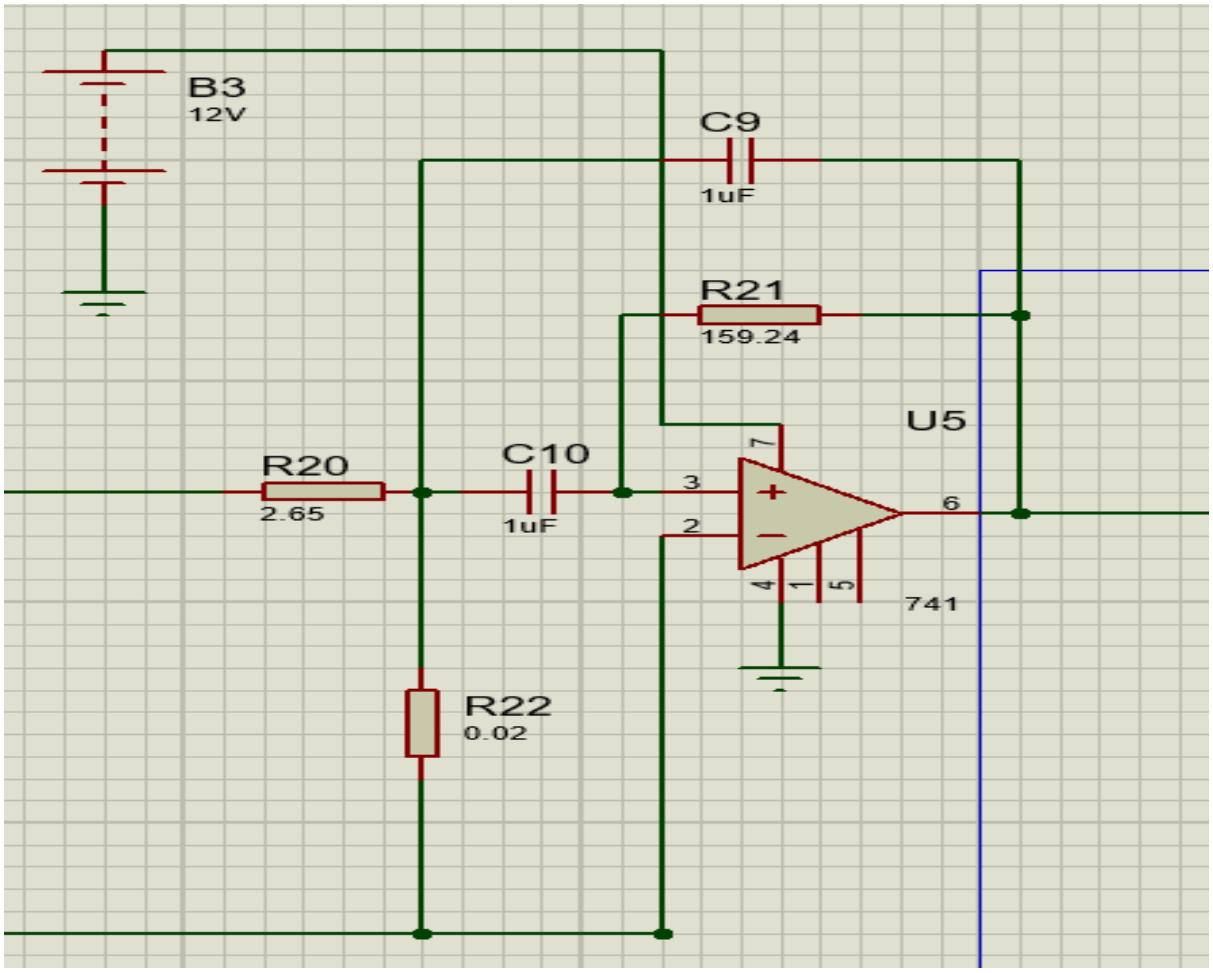

4.5 Power Amplifier

Components:

- Final amplifier stage
- Impedance matching network
- Antenna coupling components

Function:

- Boosts signal power for transmission
- Matches transmitter output impedance to antenna
- Ensures efficient radiation of RF energy

Circuit Diagram:

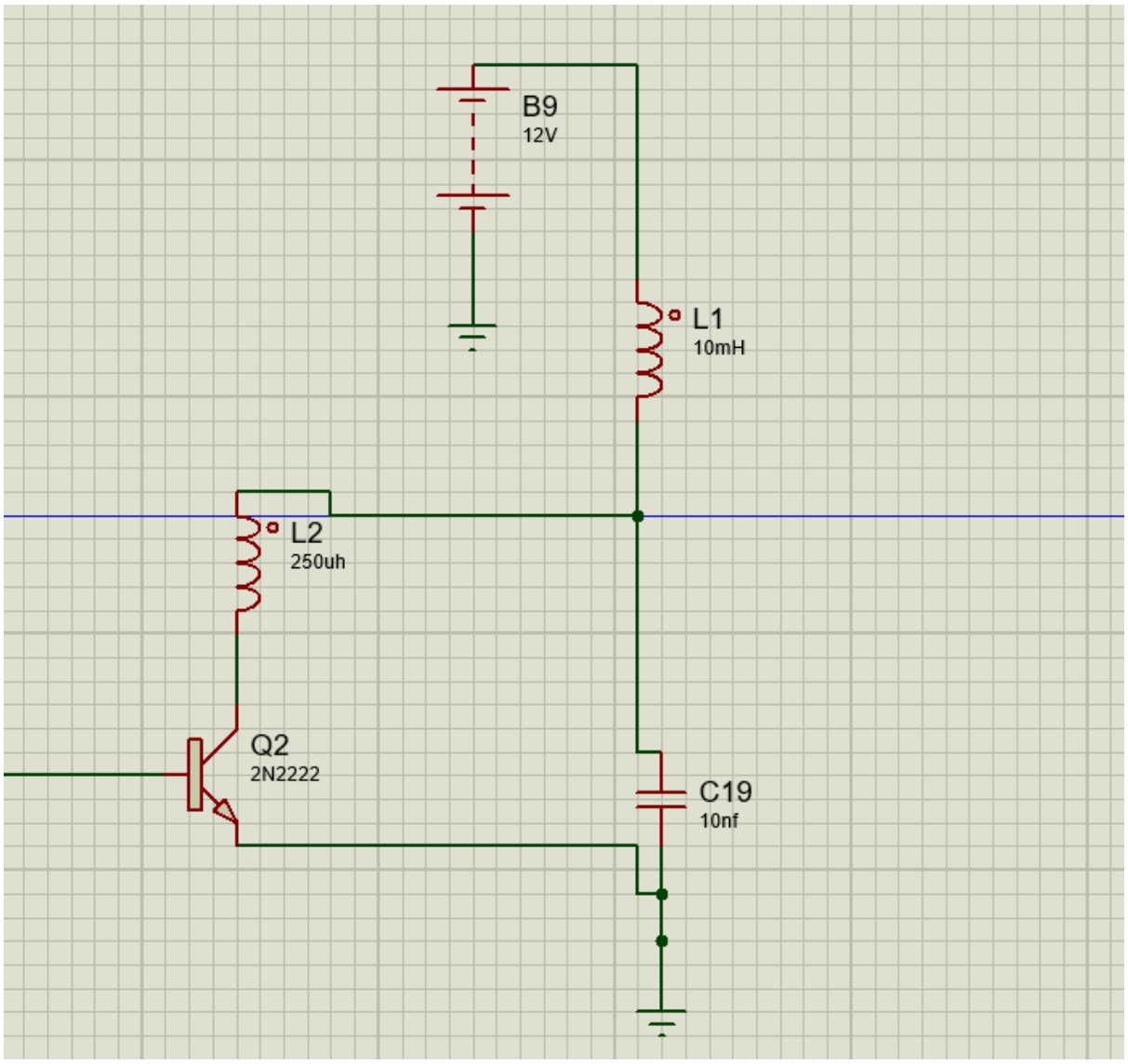

5) Receiver Design and Implementation

Block Diagram:

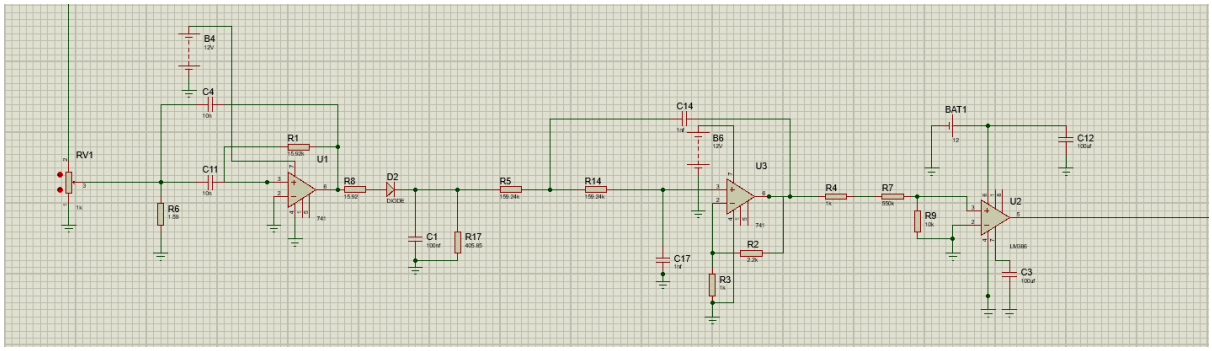

[Antenna] → [RF Amplifier] → [Envelope Detector] → [Low Pass Filter] → [Audio Amplifier] → [Speaker]

5.1 RF Amplifier (Tuned Amplifier)

Components:

- LM741 op-amp (U5)
- Tuning capacitors and inductors (values from schematic)

Function:

- Selects and amplifies the desired AM signal (100 kHz)
- Rejects other stations and interference
- Improves receiver sensitivity

Circuit Diagram:

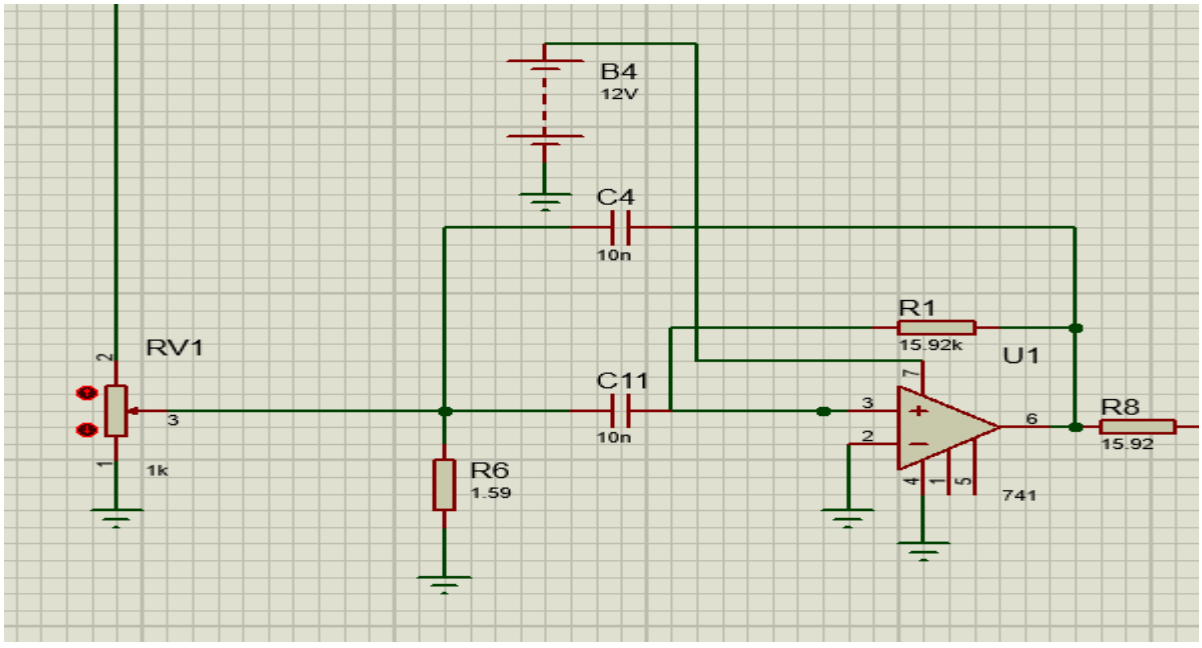

5.2 Envelope Detector

Components:

- Diode detector (D1)
- RC network (values from schematic)

Function:

- Demodulates the AM signal
- Extracts the audio envelope
- Simple but effective detection method

Circuit Diagram:

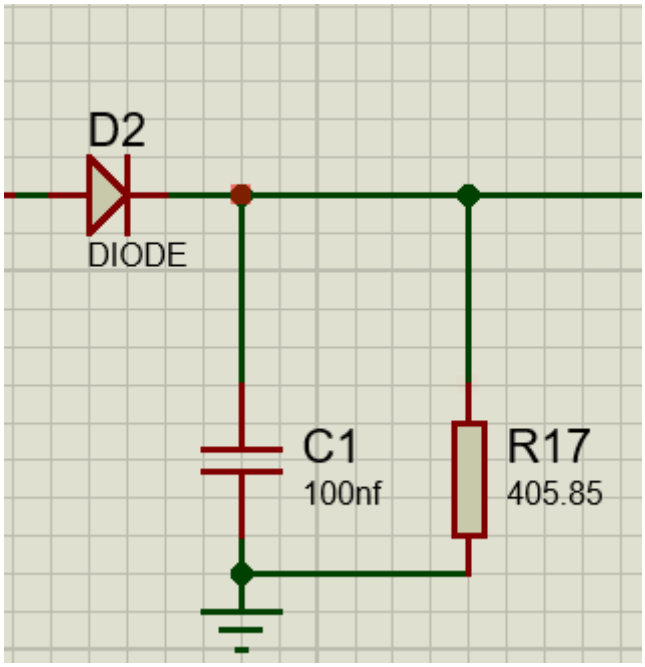

5.3 Low Pass Filter

Components:

- LM741 op-amp (U5)
- RC network (values from schematic)

Function:

- Removes remaining RF components
- Passes only audio frequencies (300Hz-3kHz)
- Improves signal-to-noise ratio

Circuit Diagram:

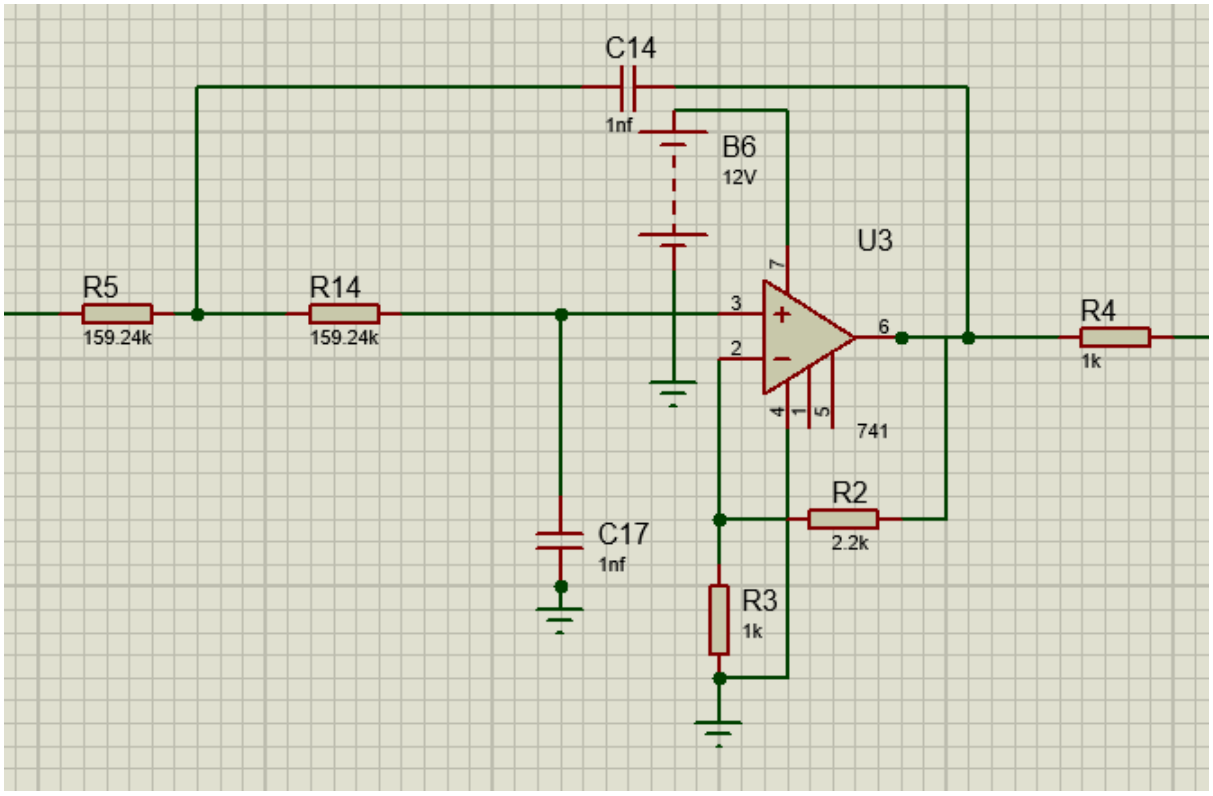

5.4 Audio Amplifier

Components:

- LM386 amplifier (U2)
- Output coupling capacitor

Function:

- Amplifies weak audio signal to speaker level
- Provides sufficient power for audible output
- LM386 is ideal for low-voltage applications

Circuit Diagram:

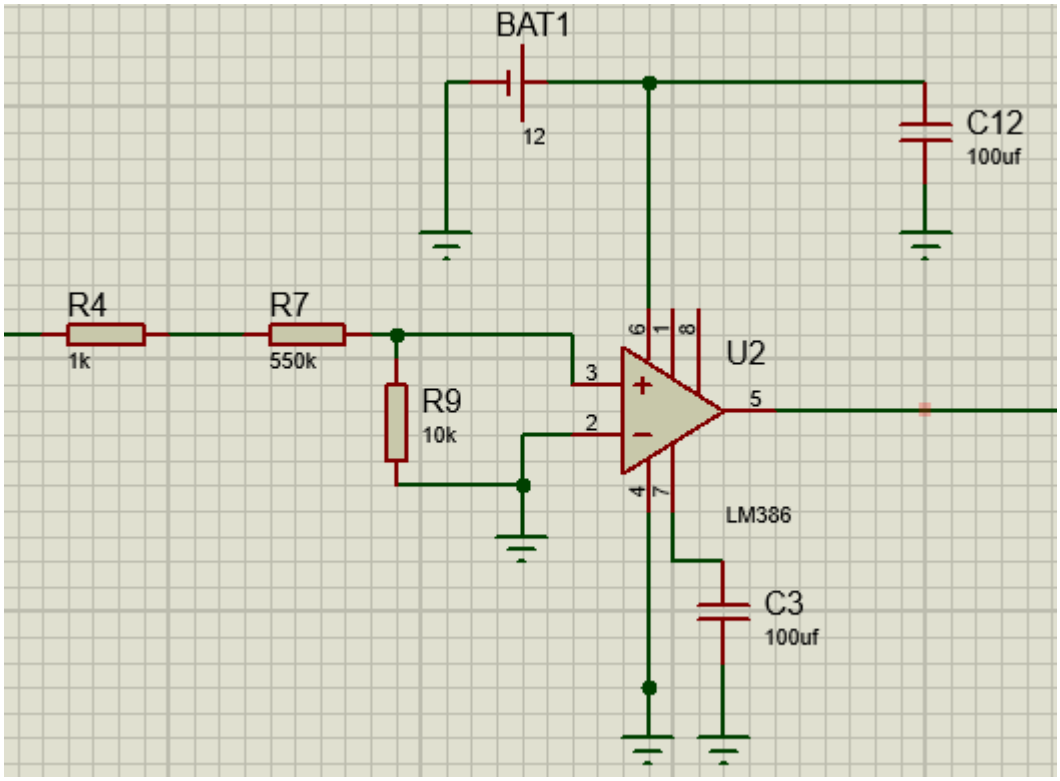

Note: A **helical antenna** was used in this project for short-distance AM broadcasting due to its compact size, omnidirectional signal coverage, and efficient performance in the medium-wave frequency range. The coiled structure enhances signal coupling while maintaining portability, making it ideal for lab-scale testing and localized transmission/reception. For long-range applications, a larger monopole or dipole antenna would be more suitable, but the helical design served effectively for demonstrating AM radio principles within a limited range.

This keeps it concise while covering:

1. **Why helical?** (Compact, omnidirectional, good for Longwave band AM)
2. **Use case** (Short-range, lab testing)
3. **Limitation** (Not for long-range)
4. **Project relevance** (Demonstration purposes)

6) Simulation and Practical Implementation

Proteus Simulation Results:

- Successful modulation and demodulation achieved
- Clear audio reproduction in simulation
- Frequency response matched theoretical expectations

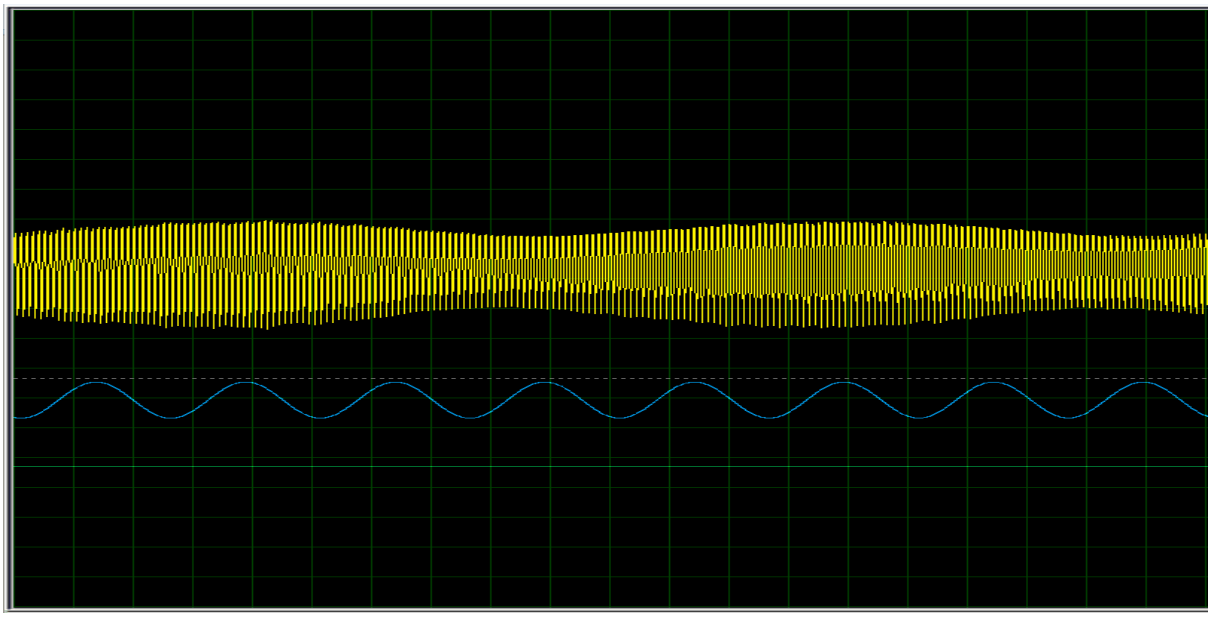

Breadboard Implementation:

- Initial testing showed good performance
- Required careful tuning of filter components
- Demonstrated practical AM transmission/reception

PCB Implementation:

- Improved stability over breadboard
- Reduced noise and interference
- Consistent performance matching simulations

7) Conclusion

This project successfully designed and implemented a complete AM radio broadcasting system using discrete components and operational amplifiers. The transmitter effectively

modulated an audio signal onto a 100 kHz carrier, while the receiver reliably demodulated and reproduced the audio. The system demonstrated the fundamental principles of AM radio communication while providing practical experience in circuit design, simulation, and implementation.

Future improvements could include:

- Implementing automatic gain control (AGC)
- Adding frequency selectivity in the receiver
- Improving the efficiency of the power amplifier
- Implementing stereo or digital modulation techniques

The project successfully met its objectives of demonstrating AM radio principles while providing valuable hands-on experience in communication system design.